CHASE DECORATOR

Chase Decorator is an aluminium extrusion, specially designed to eliminate the traditional problems experienced with the rebate curtain pole.

Chase Decorator 63 and 90mm diameter poles, are available in smooth, fluted and reeded profiles.

- Rail and pole always the same colour.
- Powder coated to SABS specification.
- At least four coats of paint are applied by hand to each pole.
- Chase Decorator can be corded or manually operated.
- Brackets concealed for clean visual effect.
- Simple finial attachment secures finial to pole and ensures that finials do not sag.
- Finials supplied - all pop-over making cleaner finish where finial joins pole.
- Available up to 6 metres - one piece.
- Chase double wheeled runner, with swivel, for smooth efficient gliding.
- Bracket design makes fitting of pole simple and easy.

CHASE RUNNER

Contents

2 & 3	FINIALS 63 & FINIALS 90
4 & 5	CENTRE PIECES & CORNERS 63
6 & 7	CENTRE PIECES AND CORNERS 63
8 & 9	TIE-BACKS
10 & 11	WOOD FINISHED
12	RETRO LOOK
13	LEATHER FINISHES
14 - 17	NEWPORT
18 - 20	SHIMMER
21	ASSEMBLY INSTRUCTIONS & SPECIFICATIONS

Xpressions

Xpressions is a division of Kirtech (Pty) Ltd, specializing in hand-painted colour finishes of curtain poles and fittings designed specifically for the top decorator.

Approximately 50 colours available

FINIALS

DISC ABS

VERONICA

DISC

HAMBURGER

LORRAINE

MERCURY

MARIE

BALL

SIMPLISTIQUE

SHARON

PATRICIA

SAMANTHA

FINE ROPE

KATHRYN

CHLOE

VICKI

ROPE

FINIALS

HAMBURGER

DISC

VERONICA

BALL

BISHOP

JOAN

ROPE

FINE ROPE

PATRICIA

CENTRE PIECES 63

CHLOË

BASKET

BEDFORD

SAMANTHA

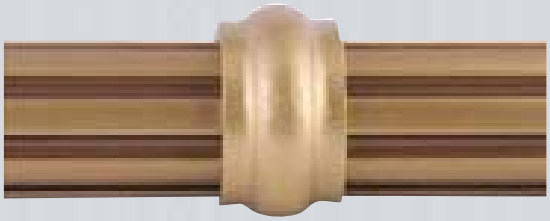

RING

SCOLLOP

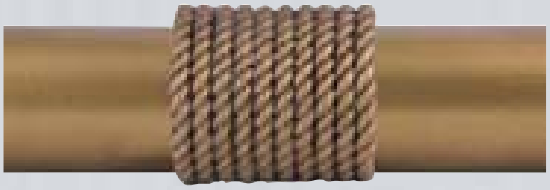

ELOFF

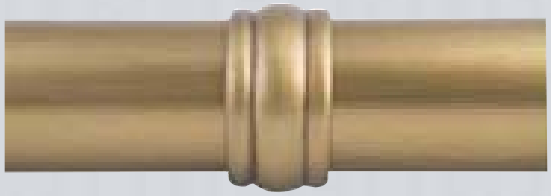

WAFER

DRAPE CROWN FLORA

CORNER PIECES

63

DOUBLE RING 90°
INSIDE

CORDELIA 90°
INSIDE

DOUBLE RING 90°
OUTSIDE

CHRISTINE

CENTRE PIECES 90

CORDELIA

WAFER

BEDFORD

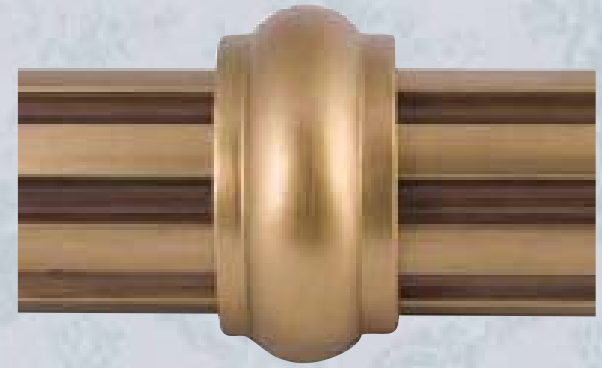

RING

CORNER PIECES

90

CORDELIA 45°
INSIDE

DOUBLE RING 45°
INSIDE

CORDELIA 90°
INSIDE

DOUBLE RING 90°
INSIDE

DOUBLE RING 90°
OUTSIDE

TIEBACKS

DOMED

DEBRA

DAISY

DISC

TWIN ROPE

CAMERON

ROPE

BASKET

SAMANTHA

TIEBACKS

ALISON

LINDSAY

DOMED TIE-BACK with stem

SAMANTHA TIE-BACK with U-arm

U-ARM
showing special bolt cap-
prevents wear on curtain

WOODS

90

MAHOGANY

IMBUIA

CHERRY

LIGHT MAHOGANY

OREGON

Woods

WOODS

90

Woods

CLASSIC BROWN

DRIFTWOOD

ANTIQUE OAK

OAK

RETRO

63

RETRO BLACK

RETRO RED

RETRO SILVER

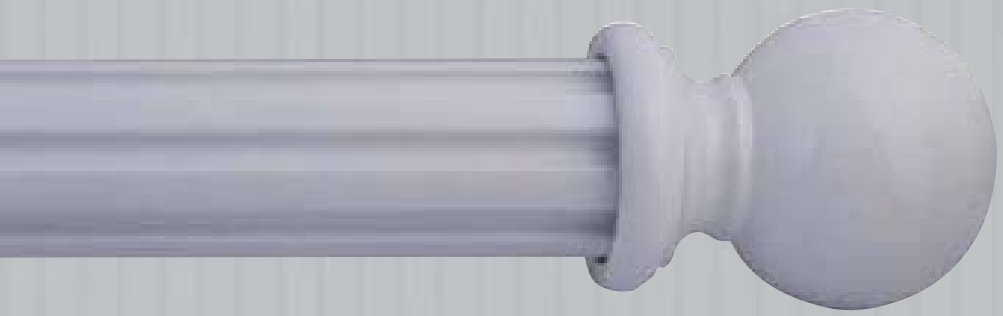

RETRO WHITE

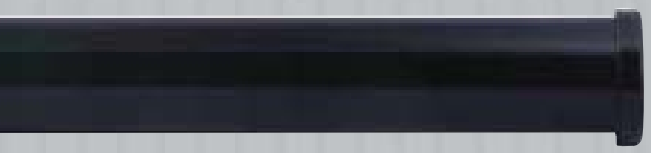

RETRO BLACK

38

RETRO RED

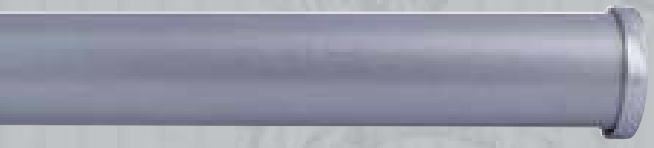

RETRO WHITE

LEATHER

90

leather

BROWN LEATHER

TAN LEATHER

BURGUNDY LEATHER

GOLD BROWN

GREY SUEDE

63

TAN SUEDE

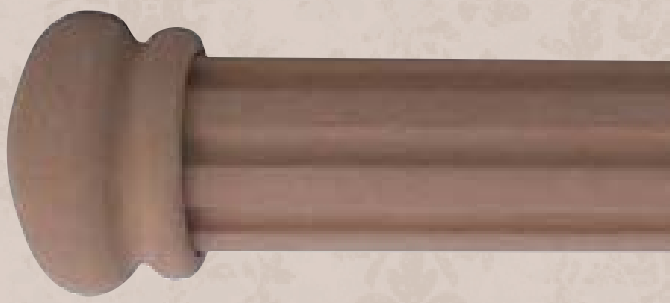

NEWPORT

63

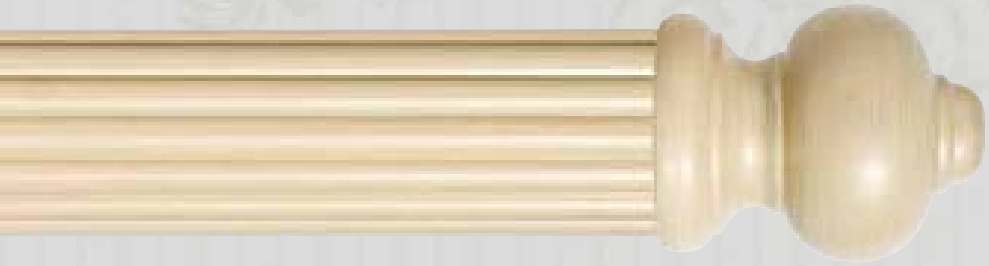

CHAMPAGNE

LIGHT STONE

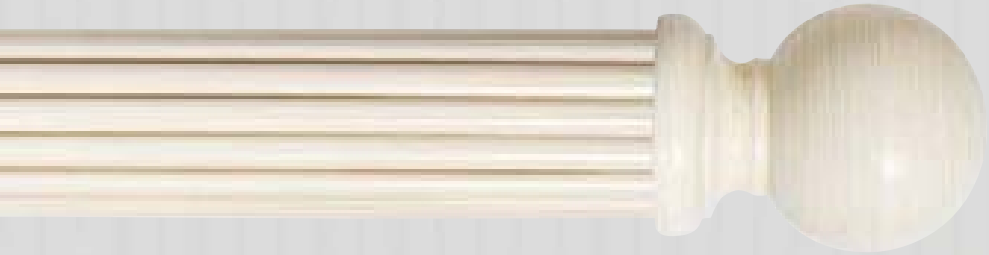

BLEACHED SAND

LIMEWASH

Newport

NEWPORT

63

Newport

NEWPORT DISTRESSED

NEWPORT AGED

PEARL

RIVER CLAY

NEWPORT

63

BEIGE ANTIQUE

NEWPORT CLASSIC

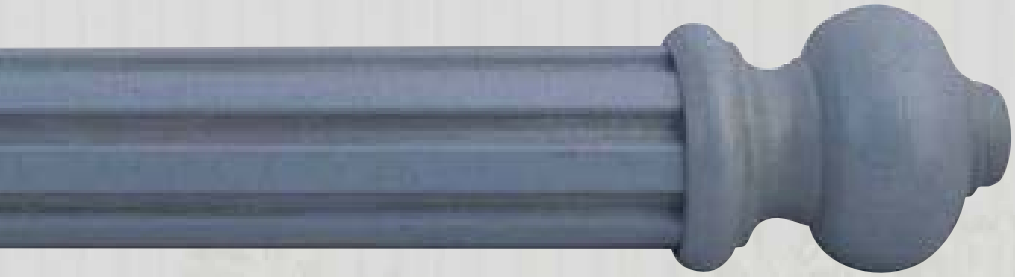

NEWPORT BLUE

Newport

NEWPORT

63

Newport

NEWPORT GREEN

FRENCH
ANTIQUE WHITE

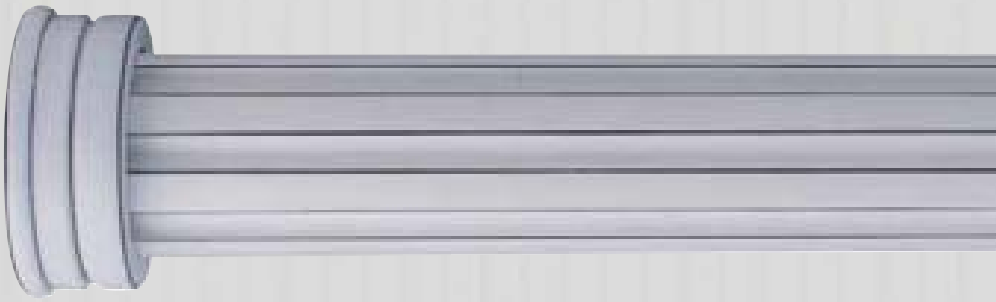

FRENCH
ANTIQUE CREAM

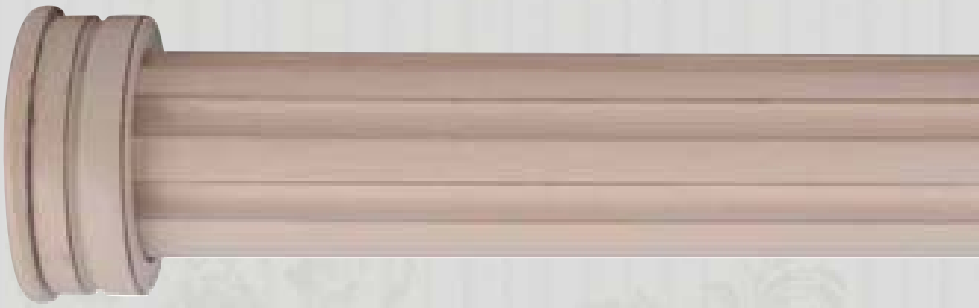

SHIMMER

90

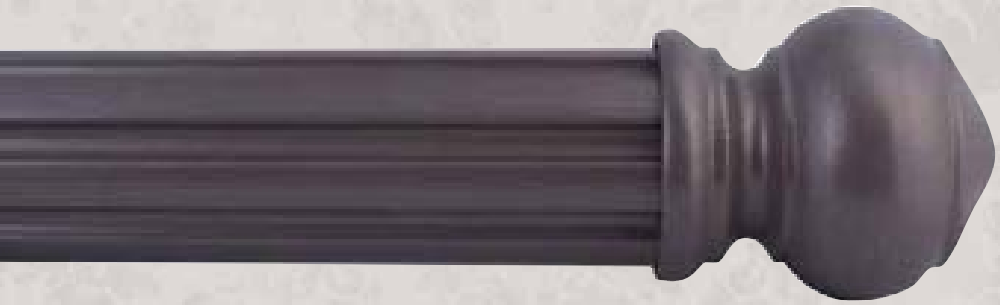

GREY SHIMMER

SILVER LEAF

SILVER

GERMAN SILVER

SILVER LEAF ANTIQUE

Shimmer

SHIMMER

90

Shimmer

GOLD LEAF

GOLD

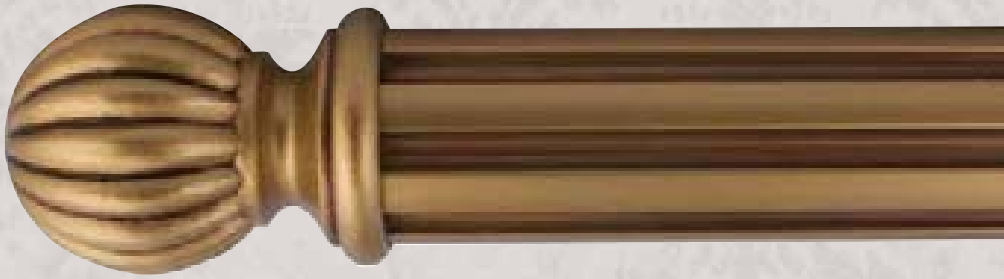

CELTIC

THAI GREEN

SHIMMER

90

BLACK SHIMMER

TUDOR

SHANGHAI MOON

BROWN SHIMMER

Shimmer

Assembly

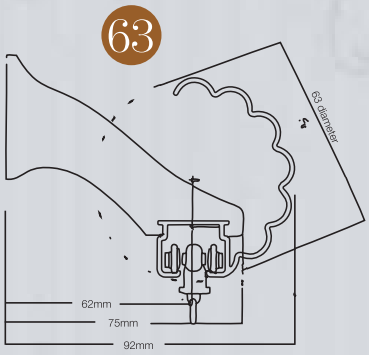

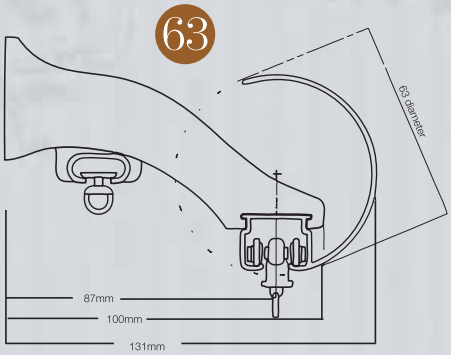

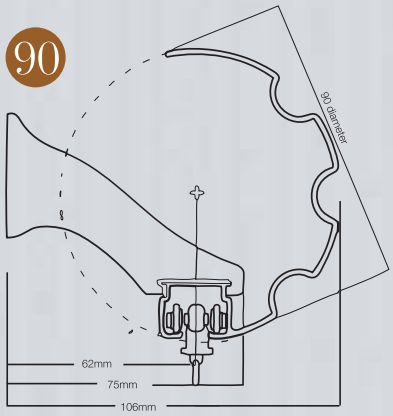

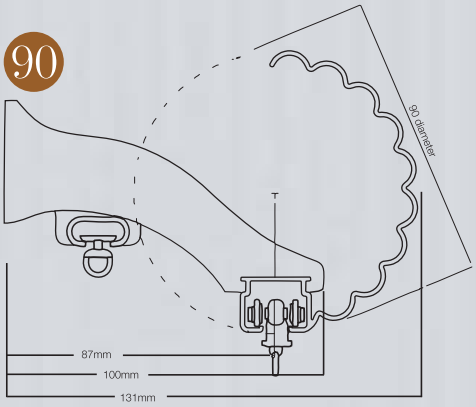

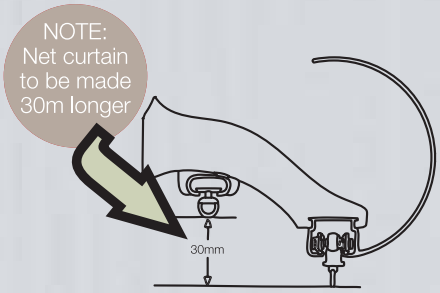

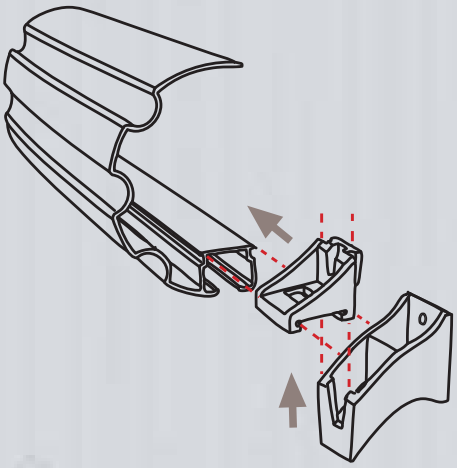

Chase Decorator protected by Design Registration Numbers A2001/0306 F2001/0307

A2001/1247 F2001/1248
A2004/1406 F2004/1404